CATALOGUE
USE - MAINTENANCE
AND SPARE PARTS

Hydraulic Demolition Breaker
MDO 2600 TS

Before carrying out any operation with or on the machine, you must read
carefully and understand each individual instruction written in this manual

socomec S.P.A.
SUPERPOWER IN ACTION

43014 Medesano (Parma) Italia - Strada Ferrari, 38
Phone +39 0525 - 420929 - Fax +39 0525 - 420375
http://www.socomecspa.com
E-mail: info@socomecspa.com

SINCERT
CERMET
SISTEMA DI GESTIONE CERTIFICATO
REG. N. 1735-A
UNI EN ISO 9001:2000

CE

This manual is reserved by law and it is formally forbidden to reproduce or to give to any third part without explicit authorization by
SOCOMEC S.p.A.

The equipment can be modified so that some details can be different from those shown herein; nevertheless this cannot be prejudicial for the texts of the following instructions.

The Instruction manual is an integral part of the machine so it must always accompany the machine until its demolition.
For each demolition always refer to the instructions.

Follow all the instructions in this manual very carefully.

The operators with lack of knowledge of instructions must be prevented from using the machine.

Instructions msu be kept complete and readable in accessible location for operators.

This manual is to be given to any other user or following owner of the equipment.

This equipment can't be put in service if the carrier machine is not declared conform to the CE no. 2006/42 directive.

ACDE Nederland B.V.

MANUFACTURER

Socomec S.p.A.
Strada Ferrari, 38
43014 Medesano (PR) - Italy
Phone +39-0525-420929 Fax +39-0525-420375

Socomec S.p.A. is not responsible for any inconvenience, breaking, accident and so on, due to lack of knowledge or to the non-observance of the information given by this manual service.

The same is valid for all those modifications, changes and/or installations of attachments not previously authorized.

1	GENERAL WARNINGS Avvertenze Generali	5
2	TECHNICAL FEATURES Caratteristiche tecniche	8
3	TRANSPORT AND INSTALLATION Trasporto e Installazione	12
4	USE OF THE HAMMER Uso del Martello	14
5	CLEANING, MAINTENANCE AND CHECKS Pulizia Manutenzione e Controlli	19
6	REGULATIONS AND GREASING SYSTEM Regolazioni ed impianto ingrassaggio	25
7	COMPLETE HAMMER EXPLODED VIEW Esploso martello completo	29
8	ACCUMULATOR AND INTERNAL GROUP EXPLODED VIEW Esploso accumulatore e interno	31
9	SUPPORT AND BODY GROUP Gruppo supporto e corpo	33
10	STROKE CHANGER Variatore corsa	36
11	INTERNAL GROUP Gruppo interno	38
12	BLOCK GROUP Gruppo blocchetto	40
13	DISTRIBUTOR GROUP Gruppo distributore	42
14	ACCUMULATOR GROUP Gruppo accumulatore	44
15	CASE Carpenteria completa	46

16	GREASING SYSTEM Impianto ingrassaggio	48
17	REQUEST OF SPARE PARTS Richiesta parti di ricambio	50

ACDE Nederland B.V.

1 General warnings

All actions representing a situation of potential danger for the operators are pointed out by the sign reproduced aside.

All actions requiring a special attention are pointed out by the sign reproduced aside.

During the work, non-authorized people must not be allowed to stay in an area, which operating range is less than 20 meters from the hammer. The people in charge of the building site will prevent this from happening.

According to the CE regulation nr. **2006/42/CE** and subsequent bringing up to date we specify that**: by "Operator" we mean the person or the people in charge of installing, operating, servicing, cleaning, repairing and transporting the machine.**

1.1 Operator safety rules

While working the hammer vibrates: thus it is dangerous to touch it or leave any object on it.
The hammer must be started by the operator whose working position is in front of the control board of the carrier.
The person in charge of the safety rules must give the operator all the instructions for the correct use of the hammer. The operator must also know how the carrier works, enquire about its safety measures and strictly obserre them.

The operator must be familiar with the technical characteristics of the hammer and especially with pressures, oil flow rates, dimensions of the flexible hoses and connections.

Before using the hammer and according to the type of work, the operator must get the following equipments: safety glasses, dust-mask, helmet, earmufes, etc.

Large and loose clothes, watches and other types of bracelets are dangerous,

The operator must not make use alcohol or drugs medicines which can produce sleepiness while working.

The working area must be indicated and illuminated.

The operator must follow the maintenance program proposed by the manufacturer and make sure that the hammer is in good conditions.

After work, the temperature of the tool can be very high: so it is necessary to leave it to cool before touching or in any case to protect hands with working gloves.

It is absolutely forbidden to temper with the safety devices and to eliminate or modify the protections.

OPERATOR

The operator is to be a person that is suited to the work and physically and psychologically able to withstand the demands connected with operating the equipment for its intended use. The operator must not allow anyone to approach the machine while it is working, and must not allow the use of external personnel. He is to follow the instructions given to obtain maximum performance, minimum consumption, and maximum safety for himself and for others. Especially in terms of safety, the operator is to scrupulously observe all the instructions given in this manual.

OPERATOR'S POSITION

When the machine is running, the operator must pay particular attention to his own position to prevent this being a source of danger to himself or those nearby. The area surrounding the equipment is divided into two zones:

OPERATOR'S ZONES

These are the zones the operator has to work in, while the equipment is working normally.
The "operator's zones" are to be considered as potentially dangerous areas. In these areas, which are indicated in the drawing below, it is best for the safety of the operator and those nearby to be very careful when the machine is working. **It is extremely important that all the accident prevention standards indicated are strictly applied.**

DANGEROUS ZONES

These are the areas that only authorized people can approach while the machine is working.
Plan view of the operator's position

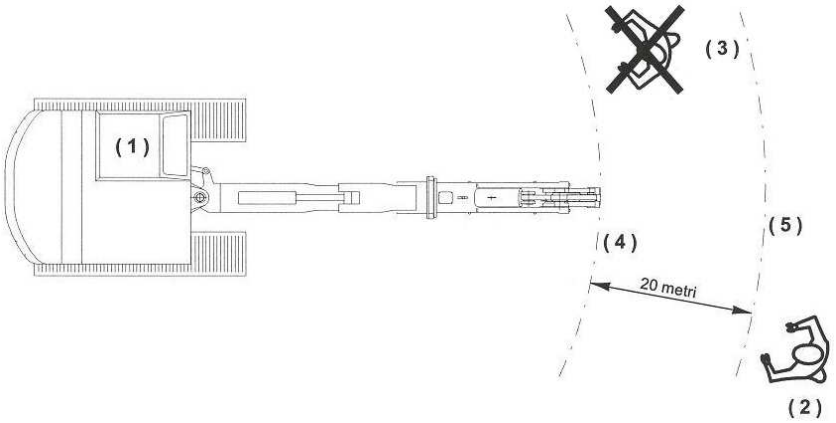

1 = Control area
2 = Person in safety zone
3 = Person in danger zone
4 = Machine's action radius
5 = Limit of safety zone

PERSONAL SAFETY EQUIPMENT

The operator involved in working with the equipment or in the surroundings of the equipment must always be equipped with adequate **Personal Safety Equipment**, that is:

- Hardhat
- Leather working gloves
- Safety shoes
- Earmuffs (when necessary).

In using and handling the equipment bear in mind both the safety devices indicated above, and all that has been described in greater detail in the **GENERAL WARNINGS AND RESIDUAL RISKS** chapter.

In addition the user should affix the following pictograms on the equipment:

Do not repair or adjust while the engine is running.

Symbol	Name
	It is obligatory to use protective goggles.
	It is obligatory to wear work clothing.
	It is obligatory to protect your hearing.
	It is obligatory to wear protective gloves.
	It is obligatory to wear protective shoes.
	It is obligatory to wear a hard hat.

2 Technical Features

2.1 Use

The hammer has been projected and manufactured for all types of demolitions, on any kind of material, to drive poles, to cut and break asphalt surfaces.

The manufacture is in accordance with the European Directive 2006/42/CE and with the Noise Directive 2000/14/CE.

Socomec S.p.A. warrants that its machines are manufactured according to the regulation quoted up-above and puts the marking “CE” on them.

ACDE Nederland B.V.

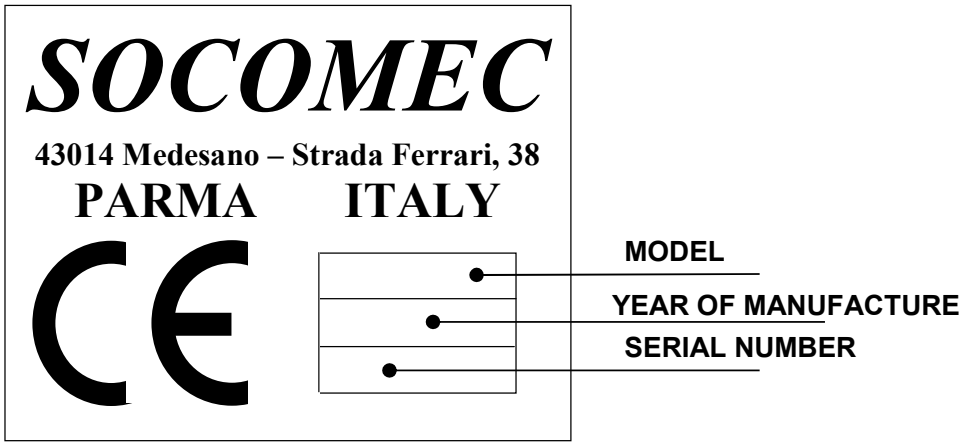

2.2 Technical features MDO 2600 TS

Technical features	unit of measurement	Value
Energy per stroke	J	**6200**
Maximum Frequency	s/min	**460 - 630**
Maximum oil flow	l/min	**230**
Maximum working pressure	bar	**140**
Maximum exhaust back pressure	bar	**10**
Accumulator charging pressure	bar	**35**
Calibration pressure of the hydraulic system maximum valve	bar	**200**
Hammer weight in working conditions	Kg	**2600**
Tool weight	Kg	**150**
Pin retainer tool weight	Kg	**7.5**
Pressure line pipe diameter (EN 856 - 4SP)	G	**1”**
Return line pipe diameter (EN 853 - 2SN)	G	**1” ¼**
Tool diameter	mm	**152**
Hammer height with tool without adapting plate	mm	**2674**
Maximum length of the tool inner guide (L)	mm	**592**
Maximum diameter in front and back the tool bushings	mm	**156,5**
Maximum oil temperature in the tank	°C	**80**
Maximum absorbed power	Kw	**55**
Excavator weight	t	**26 - 33**

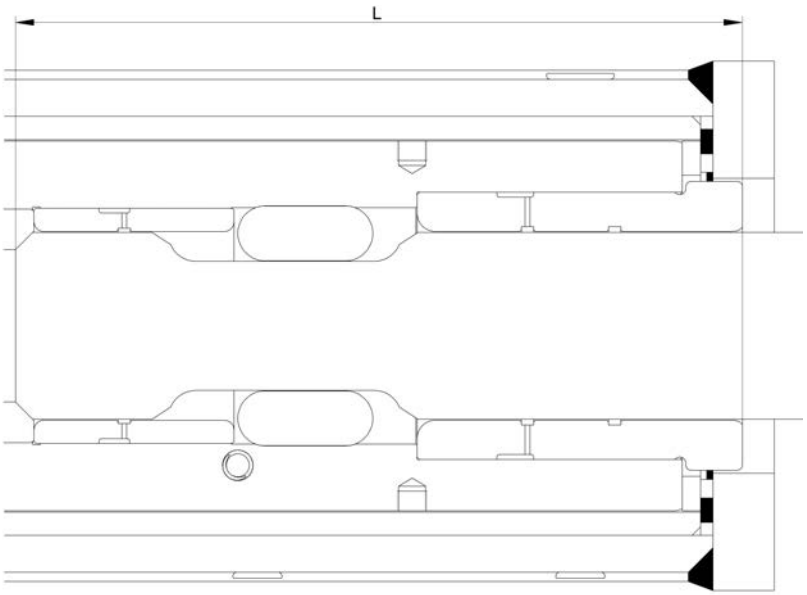

2.2.1 Tightening values:

Component denomination	Unit of measurement	Value
Tensioning bolt nut	Nm	**800 + nut rotation 60° - 65°**
Accumulator cover screw	Nm	**1100**
Accumulator screw	Nm	**1100**
Articulation plug	Nm	**150**
Variator screw	Nm	**140**
Block Screw	Nm	**250**

2.3 Optimal environmental working conditions:

DENOMINATION	Unit of Measurement	VALUE (between)
Temperature	°C	**[-5 ; +45]**
Humidity	%	**[40 ; 90]**

2.4 Overall dimensions

MDO 2600 TS

Dimensions	Size mm
A	**3094**
B	**2092**
C	**582**
D	**715**
E	**760**

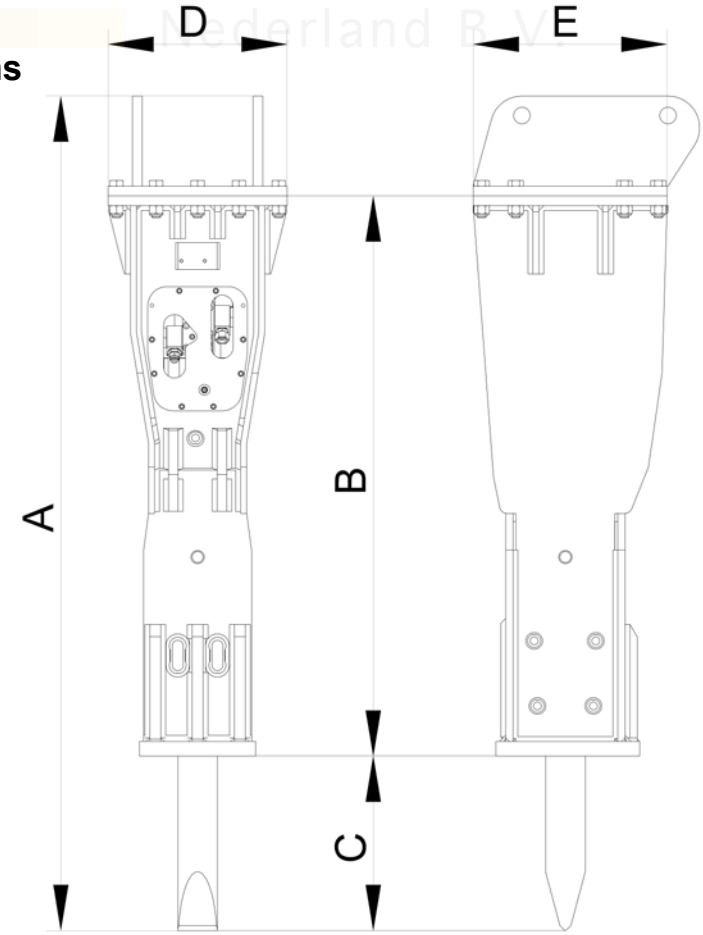

2.5 The accumulator

It's necessary to unscrew the long screws in order to remove the accumulator from the monoblock.
You will find here below the accumulator details with the long screws to be unscrewed highlighted.

MDO 2600 ACCUMULATOR SCREWS

V.L. = Long Screws

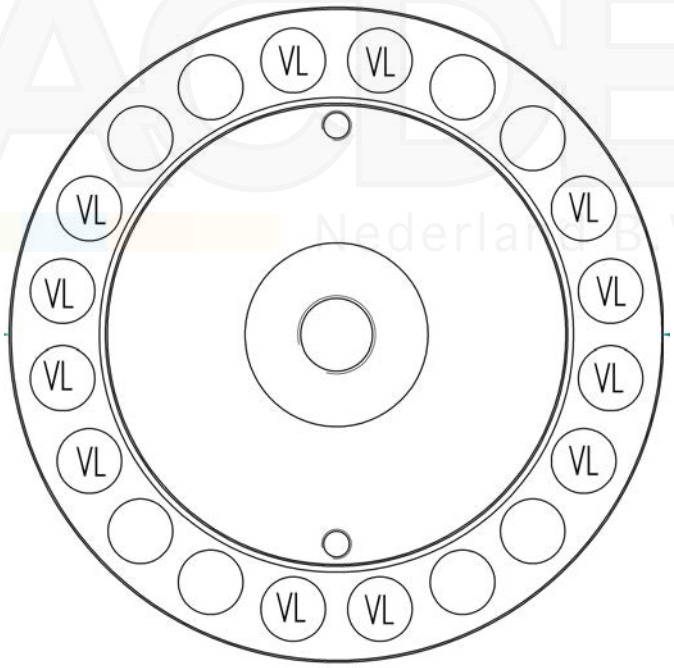

BLOCK SIDE

3 Transportation and installation

The personnel in charge of freighting and installing the machine must be acquainted with the following instructions.

Pay careful attention to the weight of the hammer.

3.1 Freight

Check in the technical specification paragraph, the total weight of the hammer, including the adapting plate and the tool already mounted.

In order to move the hammer safely, when it is not coupled to the excavator, it is necessary to have a suitable and safe lifting system (as showed in the picture on the right).

Always use means of transport and lifting that are suitable to the weight of the hammer.

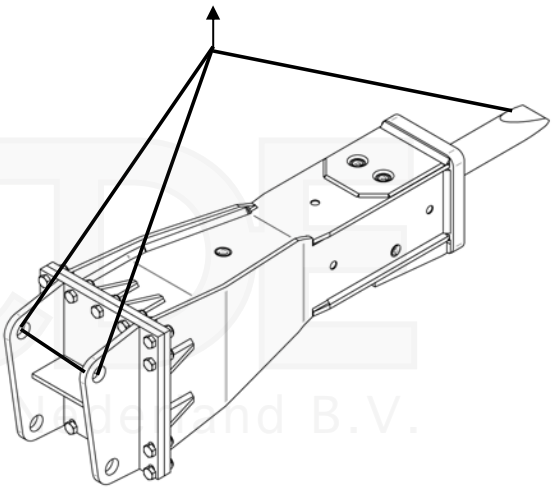

Always move with care: each inappropriate movement can be very dangerous.

Do not pass or stop under the hammer when it is lifted up.

3.2 Hammer Hoses connection

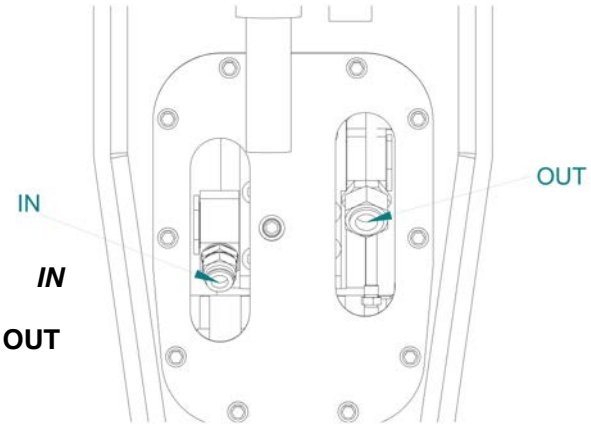

Connect pressure line hose to the entry side ***IN***

Connect returne line hose to the exit side **OUT**

3.3 Coupling on and uncoupling from the excavator

3.3.1. Coupling

1) Place the hammer horizontally with its axe parallel to the excavator boom on the ground in a stable position.

2) Remove the clamps holding the bucket and take the bucket away.

Insert the boom end in the middle of the handles of the adapting plate.

- Line up the hole of the excavator boom with the equivalent one on the adapting plate, insert the first pin and fix its clamps.

- Then line up the hole of the connecting rod with the second hole on the adapting plate, insert the second pin and fix well its clamp.

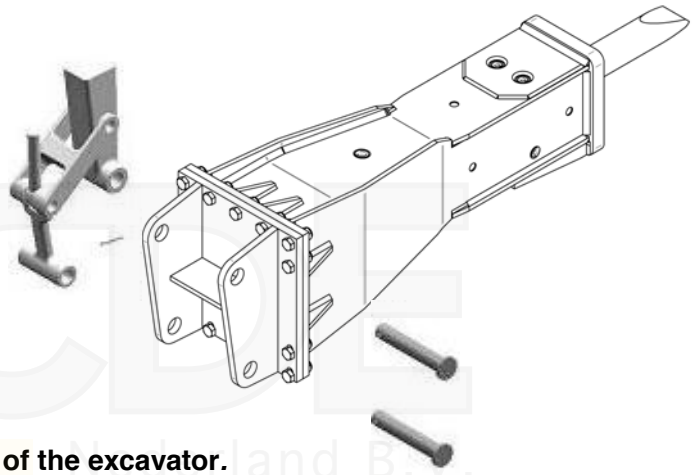

- Stop the hydraulic system of the excavator.

- Take the caps out of the system and in case they have no taps, collect the hydraulic oil in a container, then fix the hoses connecting the hammer to the system (see scheme “Hammer hoses connection” par. 3.2) and open the oil taps if present.
- Stock away the caps of the flexible hoses, which will be used again during the next uncoupling of the hammer.

3.3.2. Uncoupling

- Place the hammer horizontally on the ground in a safe area.

- Stall the hydraulic system of the excavator.

- Close the hoses' flow if possible.

- Disconnect the hoses and close up the ends of the flexible hoses in order to prevent oil leaking and dirt intake.

- Remove the connecting rod pin.

- Remove the boom pin.

- After unblocking the hydraulic system, take the excavator boom out of the adapting plate.

4 Use of the hammer

The operator must follow the manufacturer's instructions.

It is forbidden to use the hammer without the retainer pin for the tool.

Do not use tools which are not authorised by the manufacturer.

The hammer must be in an open area so that, when it begins to hit, the tool is with no doubt pressed against the surface of the material.

Engine speed

During the inspection of the hammer, the installer determinates the exact number of revs of the excavator engine to which corresponds the appropriate oil flow rate for the hammer.

It is absolutely necessary that the operator sticks this limit.

Working with a higher or lower number of revs can cause serious damages to the hammer.

4.1 Instruction for use

The hammer can work in all the positions allowed by the joints of the excavator boom, as long as it is always pressed perpendicularly against the surface of the material to be demolished.

The correct position must be kept during the whole phase of feed of the tool, operating on the controls of the bucket and the forearm.

The operator must release the correct load pressure on the hydraulic pipe line to the hammer: if it is too low, it retains a part of the energy which will be released to the excavator boom that will eventually undergo dangerous vibrations and shakings.

If it is too powerful instead, it can endanger the structure of the hammer, of the metal plate and the tool.

Moreover, while the hammer is working, we advice to shorten the distance between excavator and hammer as much as possible and to remove the cylinder piston rods only partially (C-D strokes never completely out).

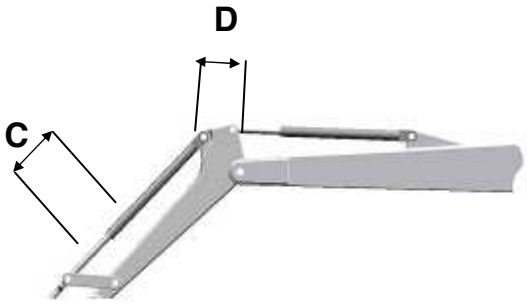

Make sure that the tool does not slip from the surface (see picture). If the tool is place wrongly or holds weakly on the material, the dangerous **blank firing** can occur**.**

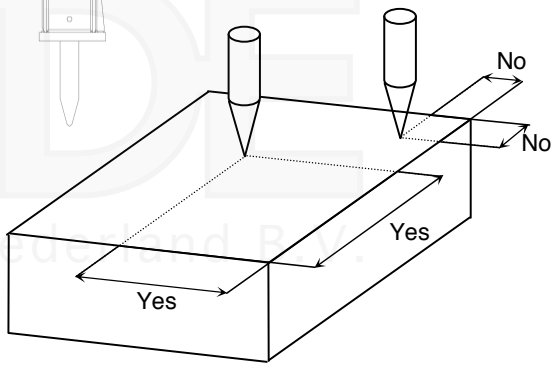

The hammer cannot work into the water if its level exceeds the tool stroke (see picture down under), unless it is specifically made for this purpose.

In case of doubt contact the manufacturer.

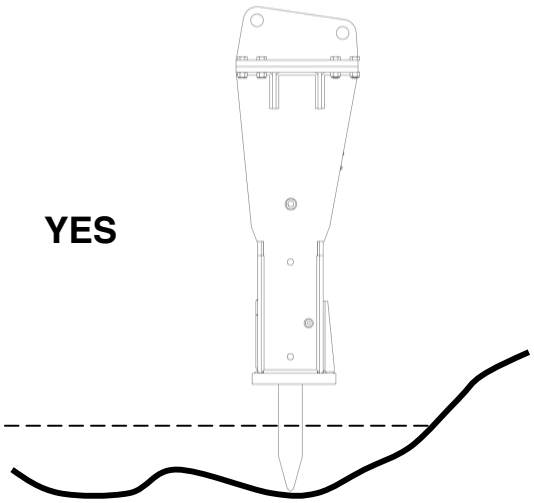

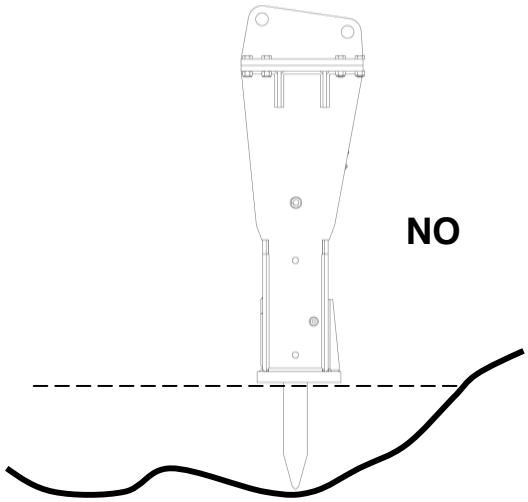

4.2 Operations to be avoided

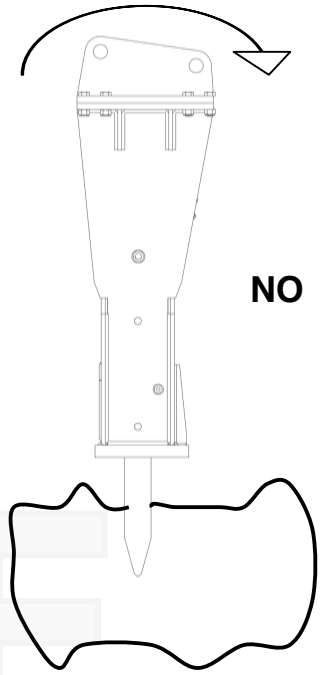

Avoid that the hammer delivers blank firings. They cause early weariness and chippings to the retainer pin for tool and to the tool itself, which scraps can provoke serious damages. Moreover, due to these blank firings, the tool will break very soon.

The tool cannot be used as a lever to move rocks or debris: this operation can cause the seizing or breaking of the tool, mainly if it is carried out while the hammer is working.

Do not remove big rocks with the help of the hammer frame: some parts can unweld and the plate can warp.

Do not hammer on the same spot for more than thirty seconds. In case of a very hard surface, it is necessary to change position very often until you find a softer ground.

If you insist on the same spot for a long time, the drill can swell up, the tool can seize and the oil can become overheated.

Never forget to pre-heat the oil before beginning to work: particularly in case of low outdoor temperatures, it is a good practice to operate the translation control and those of the central piston of the excavator boom to the end of the stroke, until the oil reaches a temperature of 25-30℃.

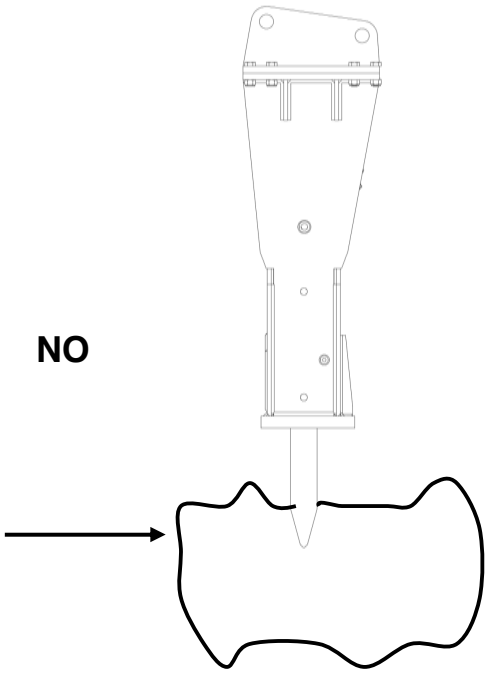

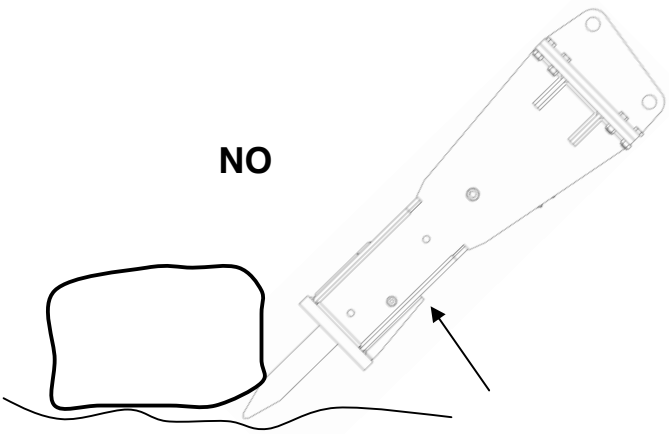

4.3 Replacement of the tool

Before replacing the tool, it is necessary to wear gloves because it overheats during the use.

Place the hammer vertically, touching the ground and lift it of a few centimetres so that the boom of the excavator supports the weight of the hammer, but with the tool still touching the ground.

Get off the excavator, after blocking the hydraulic system.

Check the weight of the pin in the technical specifications.

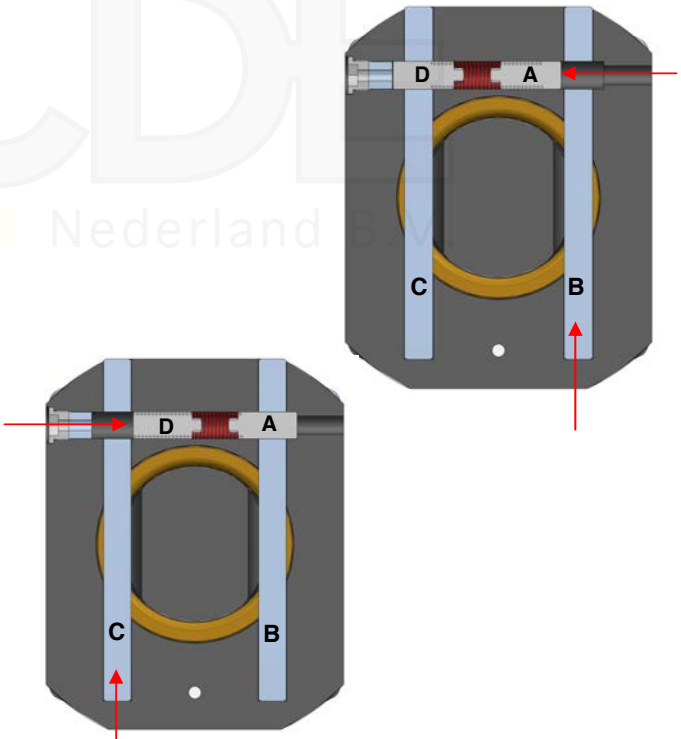

With a lever, press the retaining pin (A) towards the right side to unlock the tool retainer.
Remove the tool retainer (B).

With a lever, press the retaining pin (C) towards the left side to unlock the tool retainer.
Remove the tool retainer (D).

Catch on the prominent part with your gloves and place the pin on the ground.

Get on the excavator again and unblock the hydraulic system.

Lift the hammer vertically until the damaged tool slips off.

Coupling of a new tool

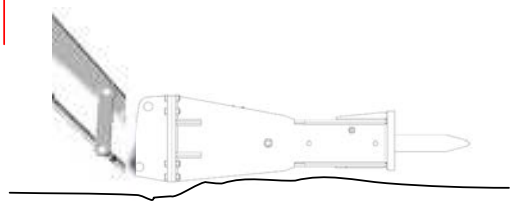

Place the hammer horizontally on the ground and the tool lined up before it.
Grease well the part that must get into the guide.

Fit the tool end (the one having the retainer flat/flats) into the guide, manually.
Two operators can be necessary if the weight is more than 30 kgs (check the weight into the technical specifications).
Then push from the other side and fit the tool completely into the guide. Rotate it so that its milled side sets parallel to the pin guide. Insert the retainer pin for tool.

4.4 Types of tools, usage and lifetime

Tools differentiate on the basis of the different shapes of their terminal parts. There are various types of tools capable of meeting the requirements of every kind of work.

Flat terminal tool (ref. A)

It is suitable for stoke crushing.
Normally used on small and medium hammers.

Chisel terminal tool (ref. B)

Used for mining in general. It is essential in demolitions where a high cutting capacity is required: for example walls, floors and reinforced concrete buildings, fixed section, diggings and excavations in stone.

Not suitable for stone crushing.

It covers 80% of the applications on small and big hammers.

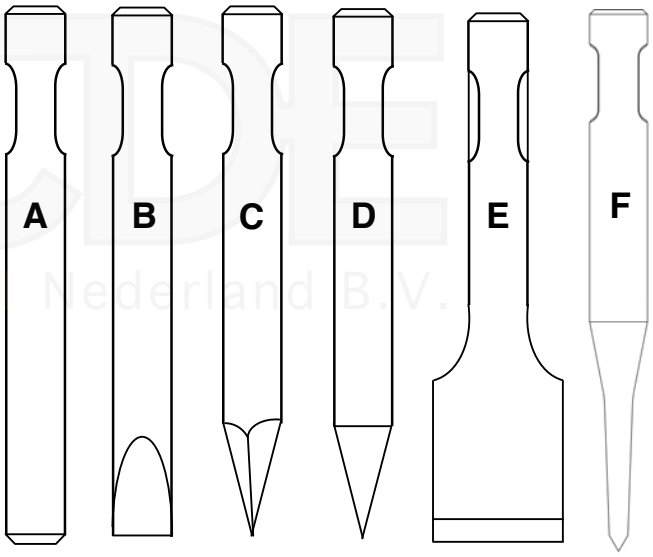

Pyramidal terminal tool (ref. C)

The use is similar to the one described up-above. To be mounted on small hammers.

Cone-shaped terminal tool (ref. D)

Suitable for the demolition of walls and non-reinforced concrete structures, for stones and quite soft materials. To be mounted on the whole range of hammers.

Small spade terminal tool (ref. E) or asphalt-cutter tool (ref. F)

Suitable for tracing the lines marking the limits of the diggings. To be mounted only on small and medium hammers.

5 Cleaning, maintenance and checks

Never operate on the hammer or on the hydraulic system, when they are under pressure or at high temperatures.
It is always essential to remove the connecting hoses between the hammer and the excavator.

5.1 Cleaning

The hammer does not require particular care. The only precaution to take consists in preventing the dirt from entering through the hose connections, which must be rigorously plugged before any operation of assembly or disassembly.

5.2 Maintenance and daily checks

The machine needs some important maintenance, in order to work correctly and for a long time.

Greasing

The greasing operation, if done manually, must be performed every 2 hours in order to provide a suitable quantity of grease. In case the hammer is supplied with an automatic greasing pump, it is necessary to pay attention to the level of the grease inside the cartridge which must be replaced before it is empty. If the hammer is connected to the excavator general greasing system, it is necessary to pay attention to the level of the grease inside the tank.

Remember to use a type of grease, which must be:
- resistant to high loads.
- water resistant, anti-rust, anti-corrosive.

Have:
- NLGI-2 penetration
- Dripping point = 200-220 C°
- Temperature of use until t=170-180 C°

It is recommended to use possibly only Socomec grease for a longer life of the parts.

Other checks to be made on the hammer

- Make sure that there are no oil leakages along the tool sank.
- Make sure that no cracks are evident on the frame or on the linking bracket.

5.3 Checks to be made on the hydraulic system

Temperature of the hydraulic oil in the tank

Make sure that the temperature, during the work, does not exceed 80℃.
Higher temperature can cause an irregular working condition and also the stopping of the hammer.

Level of the hydraulic oil in the tank

It is absolutely necessary to pay attention to the hydraulic oil level of the excavator tank. In case it is under the lowest limit, the hammer can vibrate or work irregularly.
It is important to check the rigid and flexible hoses in order to find out eventual damages, crushing or oil leaking.

5.4 Weekly maintenance

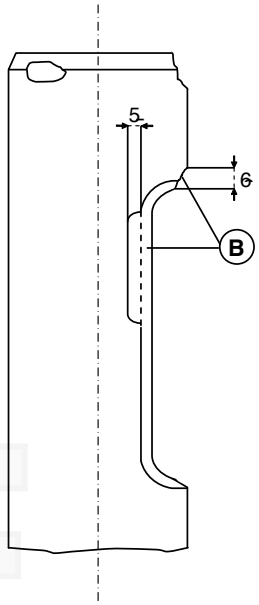

a) Take down the tool in order to determinate possible chippings or cracks in the bush and on the surfaces of the pin for tool.

These marks are proof of insufficient lubrication, use of unsuitable oil or improper use of the hammer.

With the help of a sanding disk, polish the trimmings that can be seen on the surface between the tool and the retainer pin for tool (see points B in the picture).

b) Check the wear of the retainer pin for tool; in the case of excessive wear, invert the assembly or change it.

c) Check the wear of the tool bushings; if the inside diameter is bigger than the value indicated in the technical specifications, contact the technical assistance for the replacement of the bushes.

Check on the loosening of the hammer bolts.

It is advisable to check, at regular intervals possible loosening of the bolts and particularly:

- The screws fixing the head/bracket.
- The screws fixing the flanges/pipe joints.

5.5 Machine stop

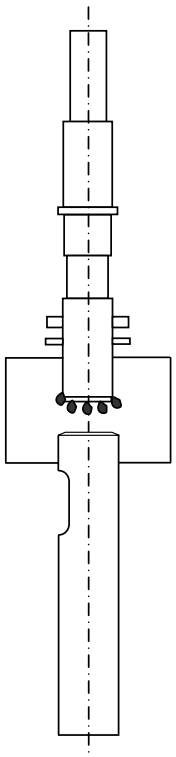

Stop at the end of a work with a hot hammer

During the night, drive the hammer vertically into the ground, so that the condensed water can easily be emptied through the prominent part of the piston, thus avoiding oxidation.

Long term stop

When the hammer is disconnected from the excavator boom and is left at a standstill for a long time, it is necessary to:

Remove the tool, push the piston (with a tube) as higher as possible, grease abundantly and re-install the tool.
This operation prevents the piston terminal from rusting.

Keep the hammer in a close place sheltered from bad weather.

Problems and solutions

Contact Socomec technical assistance for any problem that you cannot solve by just reading the following instructions.

Problem	Cause	Solution (possible in the working site)
Frequency loss with heavy and violent blows.	Very high back pressure on the exhaust line.	Check if the exhaust line hose is partially occluded, if the filters are partially or totally blocked or if the taps are partially or totally closed. Remove the obstacle.
Even though the hammer is lifted up, the tool does not slide downward.	Insufficient greasing or dirt entered between the bushings guide and the tool.	In this case, take down the tool, check the bush and eliminate the seizing marks eventually present. Then clean, grease and install the tool again.
The hammer suddenly stops after four or five blows, just after touching the ground surface.	The piston is at the bottom of the automatic brake, andthe tool is completely out.	In this case the material is usually soft. The tool sticks out, but it does not go in again. It is necessary to load the hammer correctly and to try and keep a constant load. It is possible to improve the operation by keeping the hammer as much vertical as possible, while working.
Oil leaking from the hose connection block.	The O-Ring is damaged.	Take down the block and change the seals.
Oil leaking from the hoses.	The rubber hose is damaged. The rubber hose is screwed badly.	Change the flexible hose. Screw the hose joints better.

Problem	Cause	Solution (bring the hammer to an authorized workshop)
The hammer stops after few blows, after being re-installed on the excavator.	Dirt entered into the hammer through the rubber hoses.	Take down the hammer, clean and eventually change the damaged components.
Oil leaking from the tool.	Seals are worn out. Marks on the piston surface.	Replace seals and other damaged parts.
The hammer beats with a weak penetration force and there are too many vibrations on the high pressure rubber hose.	The accumulator has lost the pre-charge or the diaphragm is broken.	Restore the correct pressure. In other cases, replace the diaphragm and restore the right nitrogen pressure.
The hammer increases the number of blows, but the power decreases.	The tool support seat (support ring) is worn out. The piston shortens its stroke.	Make sure that the tool support seat (support ring) is intact. So to operate as follows: 1) Lay the hammer on the ground and trace a mark on the tool at the level of the bush end. 2) Remove the tool and make sure that the value between the mark and the plate end of the tool is lower or equivalent to the one indicated in the technical specifications. If higher, it is necessary to change the support ring immediately.
One of the tie rod bolts is broken or loosened.	The working pressure is to high.	Ask to a technical service to change it (it is always suggested to replace all 4 tie rod bolts) or to tighten it well at the correct torques (see technical specifications – tightening values). Check the oil flow to the hammer.

5.6 Technical service

Socomec SpA, at its factory in Medesano (Parma-Italy), can solve any problem concerning the use, maintenance and repair of the hammer.

Socomec SpA can supply the name of the nearest authorized workshop for any type of assistance.

It is absolutely necessary to address to a specialized technical service.

5.7 Instructions for scrapping

The main materials composing the machine are listed below, with a reference to the interested element:

All components of the structure and the moving parts	**Steel**
Accumulator diaphragm	**Rubber**
Upper and lower stroke-end stoppers	**Synthetic rubber and steel**
Seals & O-rings	**Rubber & teflon**
Soundproofing materials	**Synthetic rubber**

The accumulator contains nitrogen under pressure. Before scrapping, exhaust the nitrogen under pressure, which is in the accumulator, through the charging valve.

The various materials composing the machine must be demolished in appropriate dumping grounds.

In any case stick to the laws in force in the country where the hammer is used.

5.8 Warranty

The producer assures the customer a warrantee term which is foreseen in the contract of purchase.

The customer will lose his rights on warranty, if he does not comply with the terms of payment (just even once), or if the breakdowns are caused by the customer himself, his employees or others, through: an improper installation (if not made by the manufacturer), inexperience in handling the machine, improper use, bad maintenance, modifications, mending, changes or tampering made without an authorization by the manufacturer.

The warranty decays if non original spare parts are used by the customer (including the tools and the retainer pins for the tool).

All those parts subject to wear and tear, are excluded from warranty.

The warranty, which the producer must grant by law, is limited to the change and mending of the parts damaged by the manufacturer himself and this at his own choice.

The report on possible faults must be done by the customer, within 8 days, by registered letter. No compensation for damages is due to the customer.

The faulty parts must be sent to the supplier's factory, carriage free, in order to be inspected and eventually changed or repaired under warranty.

Where the installation is made by the manufacturer, any damage provoked to the customer or others, during the installation, falls on the customer's responsibility.

6 Regulations and greasing system

6.1 How to regulate the pressure control valve

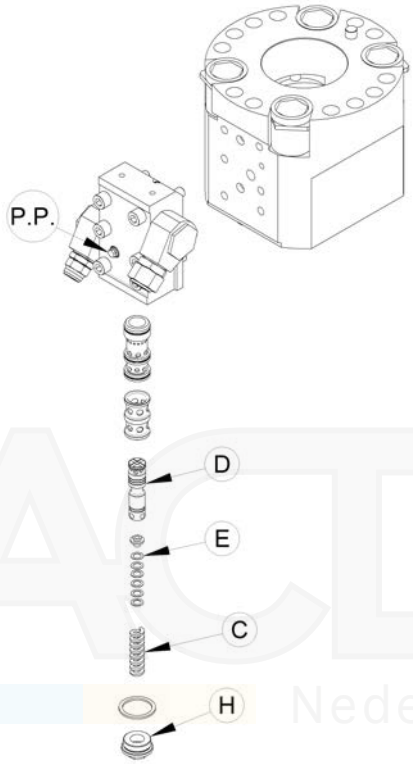

In order to verify the setting of the valve, you have to proceed as follows:

1. Connect a manometer (with the scale 300-400 bar) to a capillary hose 8-10 m long to get the working pressure from a safe distance.
2. Install the other extremity of the hose with the plug "P.P."
3. Operate the hammer and check the working pressure on the manometer.

If the pressure is lower than what indicated by the manufacturer (see par. 2.2 "Technical features") you have to:

A. Remove the plug "H"
B. Take off the spring "C"
C. Insert, between the spring "C" and the collar of the small piston "D", the necessary number of washers "E", until the correct working pressure is achieved. In order to know which is the correct number of washers to add, you have to consider that **one washer** makes a variation on the working pressure of **7 bar**. The washers must have the following characteristics: thickness 0.5 mm, Øi=14mm, Øe=21.8 mm.

If the measured working pressure is higher than what indicated by the manufacturer (see par. 2.2 "Technical features") you have to:

D. Repeat the same steps mentioned above (A+B);
E. Remove the necessary number of washers to get the right working pressure as explained above.

6.2 STROKES LENGTH VARIATION

The hammer, when delivered to every customer, is set with the long stroke indicated as L (see picture n.1).

In order to modify the length of the strokes from Long to Short, you need to rotate 90° clockwise or anticlockwise the central screw with a screwdriver or with a wrench key by turning it with the split in vertical position as appears in picture 2.

If you want to get back to Long Strokes you only have to rotate again 90°.

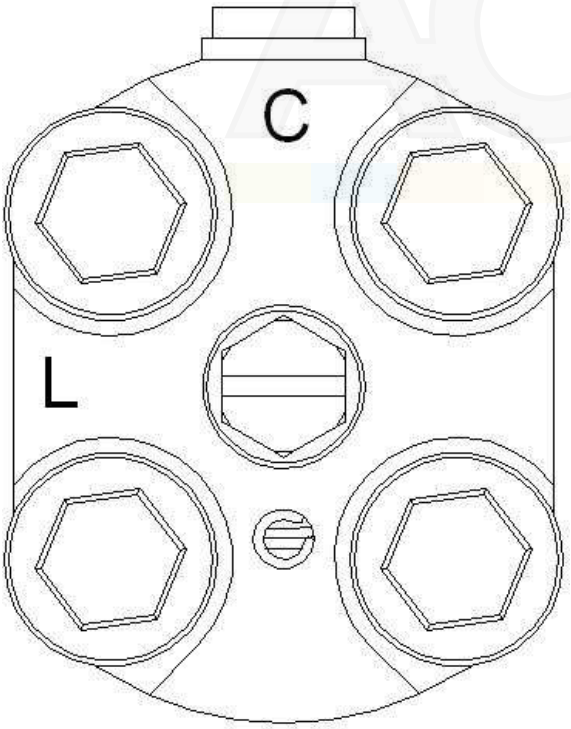

Picture 1
Long stroke position

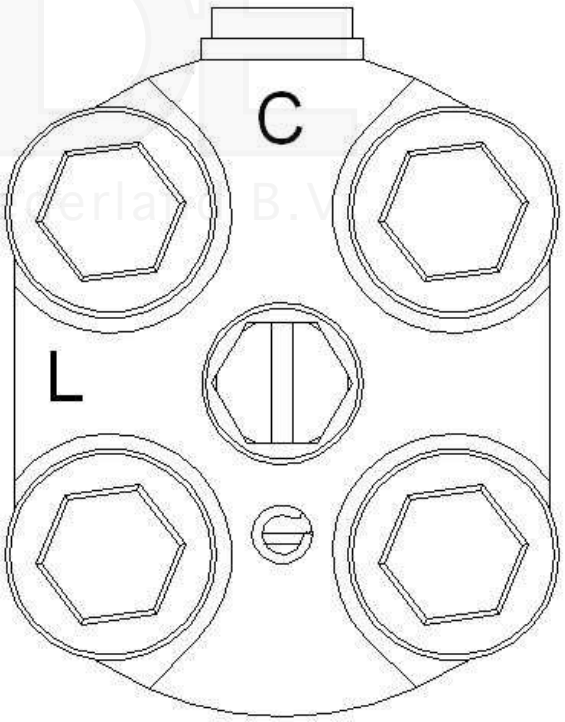

Picture 2
Short stroke position

6.3 How to install the greasing system

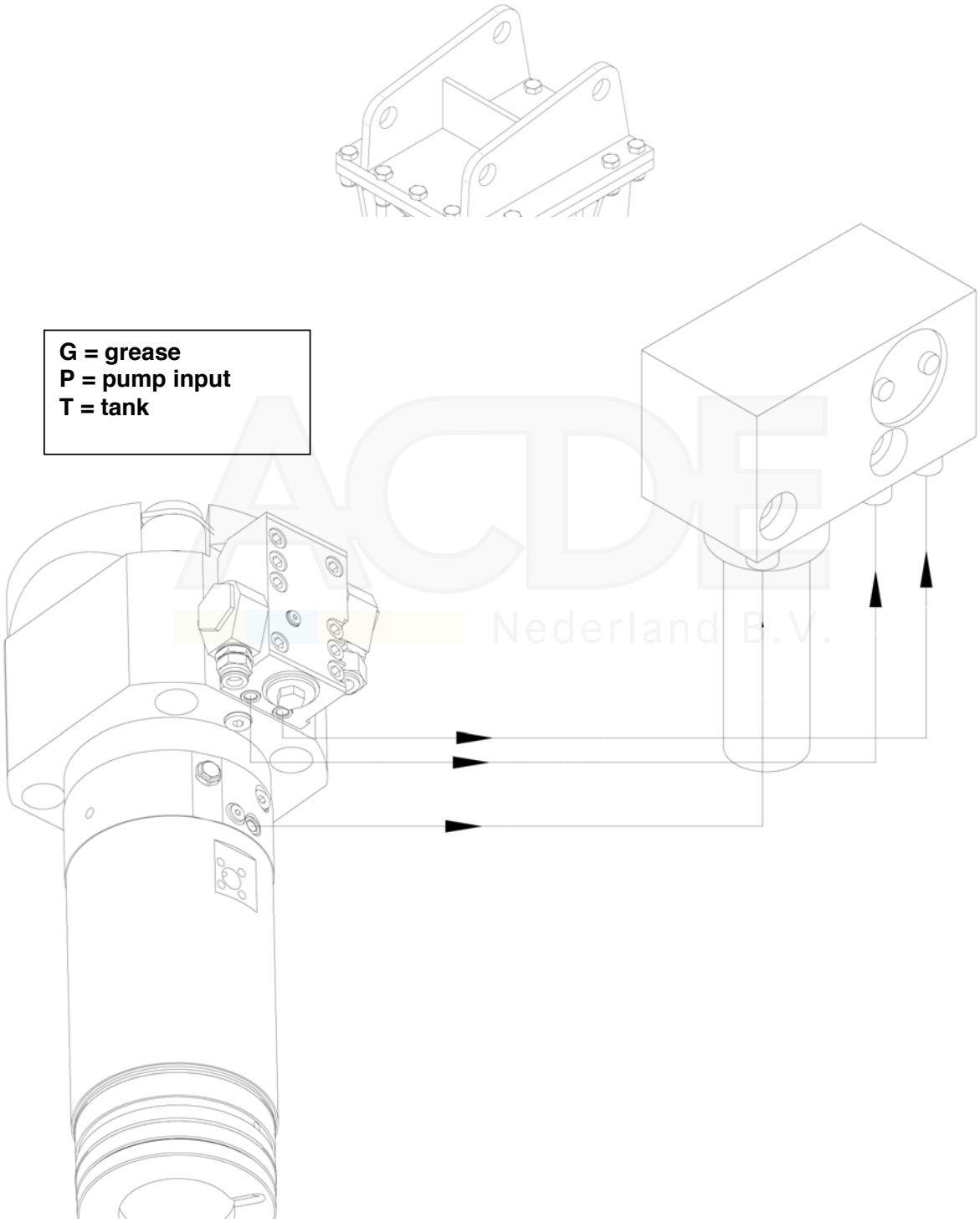

The hammer can be equipped with a lubrication system. For the installation of the lubrication system, it is necessary to follow the above scheme. The hoses of the grease (input and output) have to be linked to the greasing pump. In order to have a correct installation, please read and follow the manual supplied by the lubrication system's manufacturer.

6.4 Grease supply setting

To set the grease supply you must act on the restricting system of the hydraulic motor of the pump. The hydraulic circuit must not be in pressure. To act on the restricting system first of all you must unscrew the plug (fig. 12, pos. 2). After this operation act on the register (fig. 12, pos. 1) with a screwdriver.

By unscrewing the register you widen the section and therefore increase the amount grease supplied. Before putting once again in action the pump, mount the plug with the copper washer (fig. 12, pos 2). Functional control occurs through the visible eccentric shaft (fig. 12, pos. 3).

Fig. 12

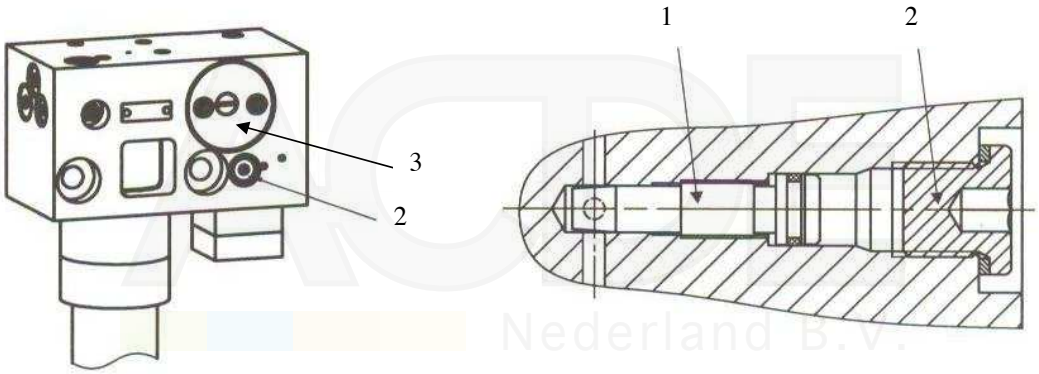

The following diagram shows the values for setting purpose. Before proceeding to the setting, screw the register completely. To set the grease supply, unscrew the register as shown in the following graphic.

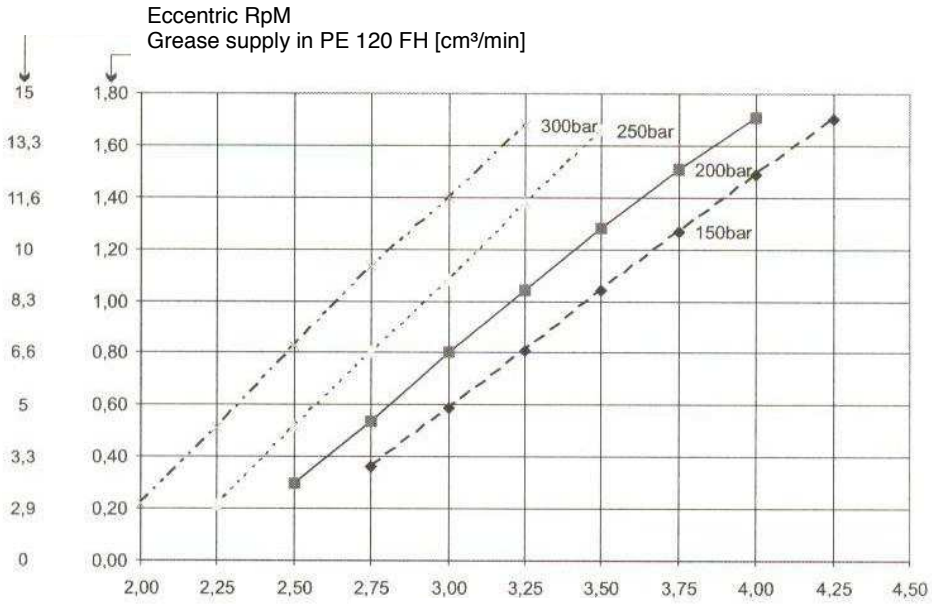

7 Spare parts

For a correct and prompt answer to the various requests of parts, it is absolutely necessary that they are completed with the following details:

a) Exact name and reference number of the parts required (these specifications can be taken in the list written in the following pages);

b) Exact serial number of the hammer for which the spare parts are required.

To order the spare parts use the form at the end of this manual.

ACDE Nederland B.V.

Spare parts

(Refer to the exploded views of the previous pages)

Ref	Quantity	Code	Description
1	1		ADAPTING PLATE
2	12	A.00030576	SCREW
3	12	A.00330001	NUT
4	1	B.09858100	SHELL

ACDE Nederland B.V.

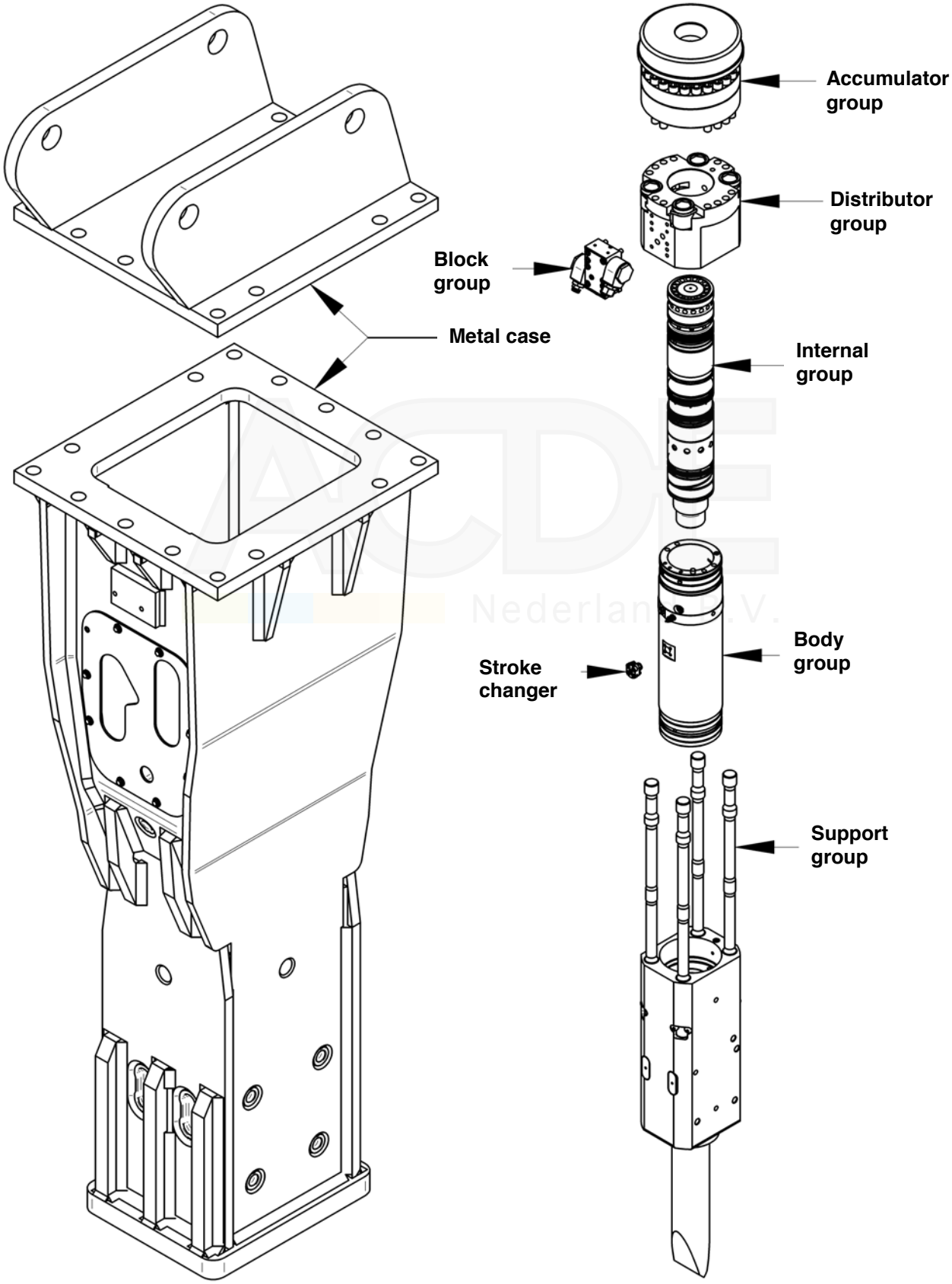
Accumulator group
Distributor group
Block group
Metal case
Internal group
Body group
Stroke changer
Support group

Spare parts

(Refer to the exploded views of the previous pages)

Ref	Quantity	Code	Description
5	1	A.00010366	O-RING
6	1	A.00010374	SEAL
7	8	A.00030606	SCREW
8	1	A.00053464	NITROGEN CHARGING VALVE
9	1	B.05040200	DIAPHRAGM
10	12	B.06540400	SCREW
11	1	B.08540100	ACCUMULATOR BASE
12	1	B.08540200	ACCUMULATOR COVER
13	1	B.08560100	UPPER BUFFER
14	1	A.00010224	SEAL
15	1	A.00010635	SEAL
16	1	A.00010649	SEAL
17	10	A.00014275	O-RING
18	1	A.00015015	SEAL
19	1	A.00030219	ALLEN PLUG
20	1	B.06520110	BODY BUSH RING
21	1	B.06530140	DISTRIBUTOR BUSH
22	1	B.06530210	DISTRIBUTOR VALVE
23	1	B.06530310	PILOTING PISTON
24	1	B.06530310	PILOTING PISTON
25	1	B.08520400	UPPER BODY BUSH
26	2	B.08530500	ALLEN PLUG
27	1	B.09120200	LOWER BODY BUSH
28	1	B.09120300	CENTRAL BODY BUSH
29	1	B.09125100	PISTON

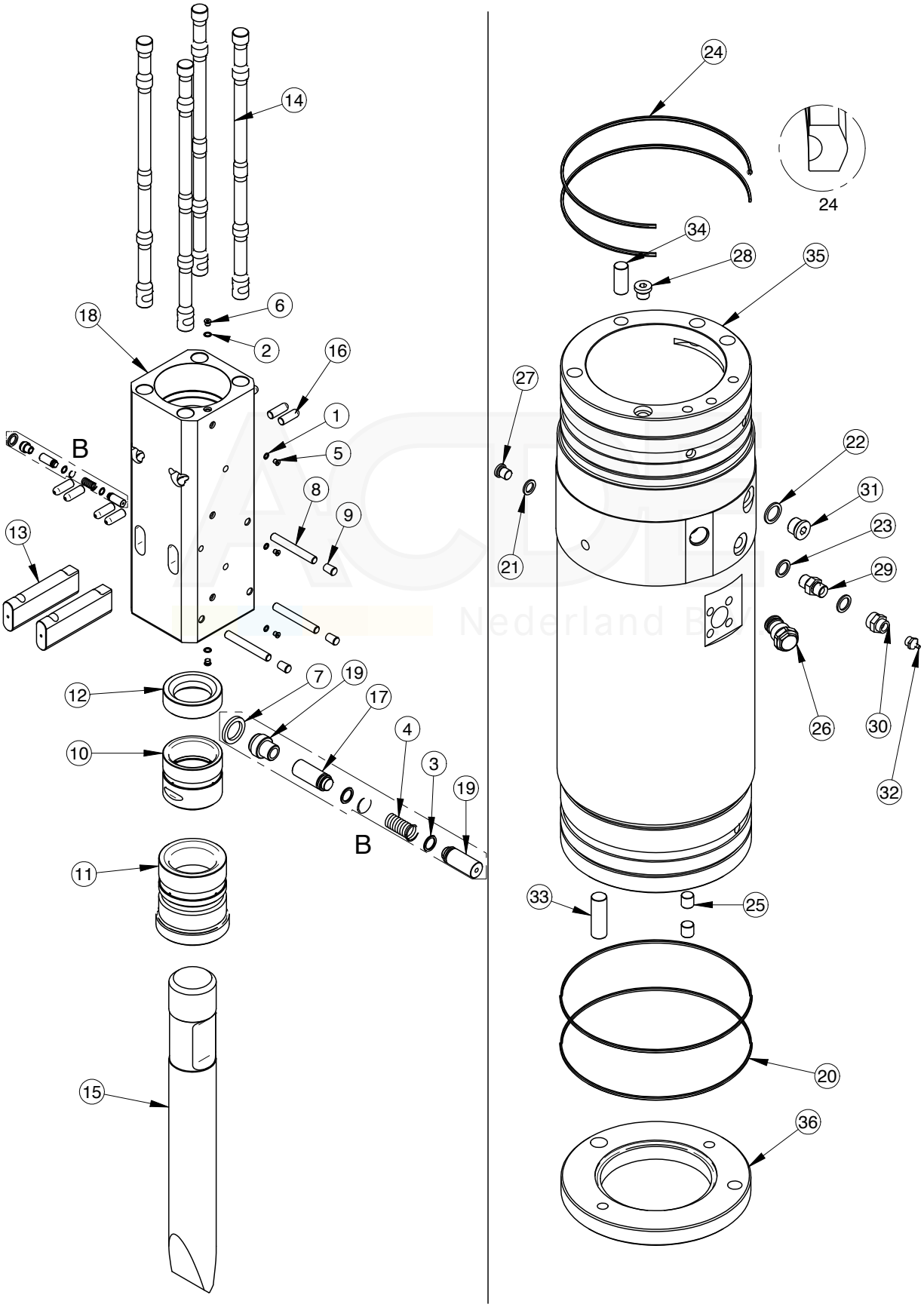
14
6
2
18
16
1
5
B
8
9
13
12
7
19
17
4
3
19
10
B
11
15
24
24
34
28
35
27
22
31
23
21
29
26
30
32
33
25
20
36

Spare parts

(Refer to the exploded views of the previous pages)

Ref	Quantity	Code	Description
1	3	A.00010409	BONDED WASHER
2	2	A.00010431	BONDED WASHER
3	2	A.00011170	O-RING
4	1	A.00031006	SPRING
5	3	A.00331040	PLUG
6	2	A.00331041	PLUG
7	1	B.12010900	STOP RING
8	3	B.17010500	LOCKING PIN
9	3	B.19511200	PLUG
10	1	B.23010200	INTERNAL SUPPORT BUSH
11	1	B.23010300	EXTERNAL SUPPORT BUSH
12	1	B.23010400	SUPPORT RING
13	2	B.23010500	TOOL RETAINER
14	4	B.23010910	TIE ROD
15	1	B.23011000	TOOL
16	8	B.23011600	TIE ROD RETAINER
17	2	B.23011800	TOOL RETAINER PIN
18	1	B.26010110	SUPPORT
19	1	B.26010200	STOP LATCH
20	2	A.00010178	O-RING
21	1	A.00010409	BONDED WASHER
22	1	A.00010430	BONDED WASHER
23	2	A.00010431	BONDED WASHER
24	2	A.00010716	SEAL
25	2	A.00030653	ALLEN PLUG
26	1	A.00053237	UNIDIRECTIONAL VALVE
27	1	A.00331040	PLUG
28	1	A.00331071	PLUG
29	1	A.00332133	NIPPLE
30	1	A.00332140	REDUCTION
31	1	A.00332930	PLUG
32	1	A.00440159	GREASE NIPPLE

Spare parts

(Refer to the exploded views of the previous pages)

Ref	Quantity	Code	Description
33	1	A.03330381	CYLINDRICAL PIN
34	1	A.03330384	CYLINDRICAL PIN
35	1	B.26020100	BODY
36	1	B.26020600	BODY BUSH RING

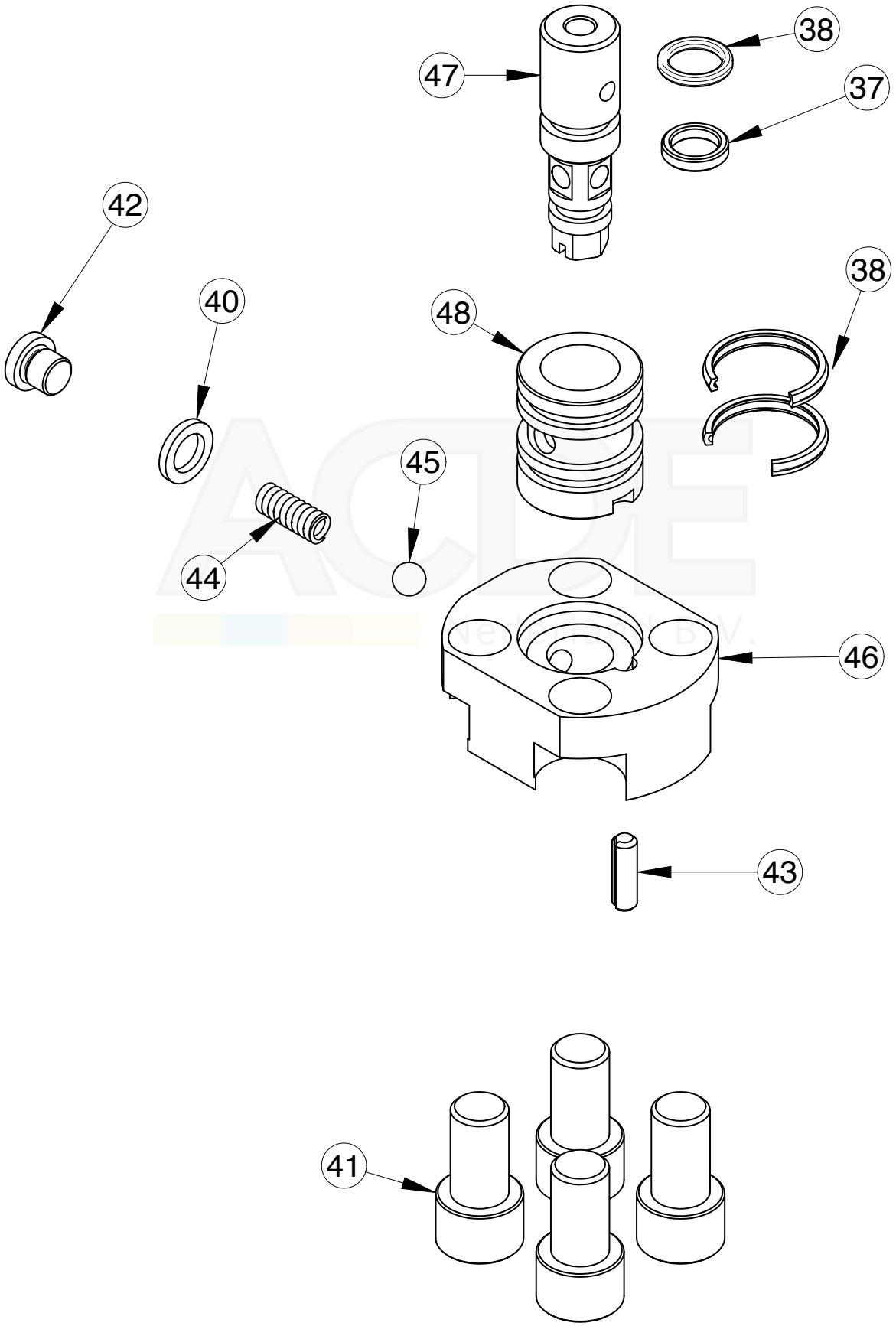
47
38
37
42
40
48
38
45
44
46
43
41

Spare parts

(Refer to the exploded views of the previous pages)

Ref	Quantity	Code	Description
37	1	A.00010188	O-RING
38	1	A.00010198	O-RING
39	2	A.00010377	SEAL
40	1	A.00010433	BONDED WASHER
41	4	A.00030665	SCREW
42	1	A.00331039	PLUG
43	1	A.03330370	ELASTIC PIN
44	1	A.03330458	SPRING
45	1	A.03330470	SPHERE
46	1	B.10011100	VARIATOR FLANGE
47	1	B.15522200	COMMUTATION SHAFT
48	1	B.15522300	VARIATOR BUSH

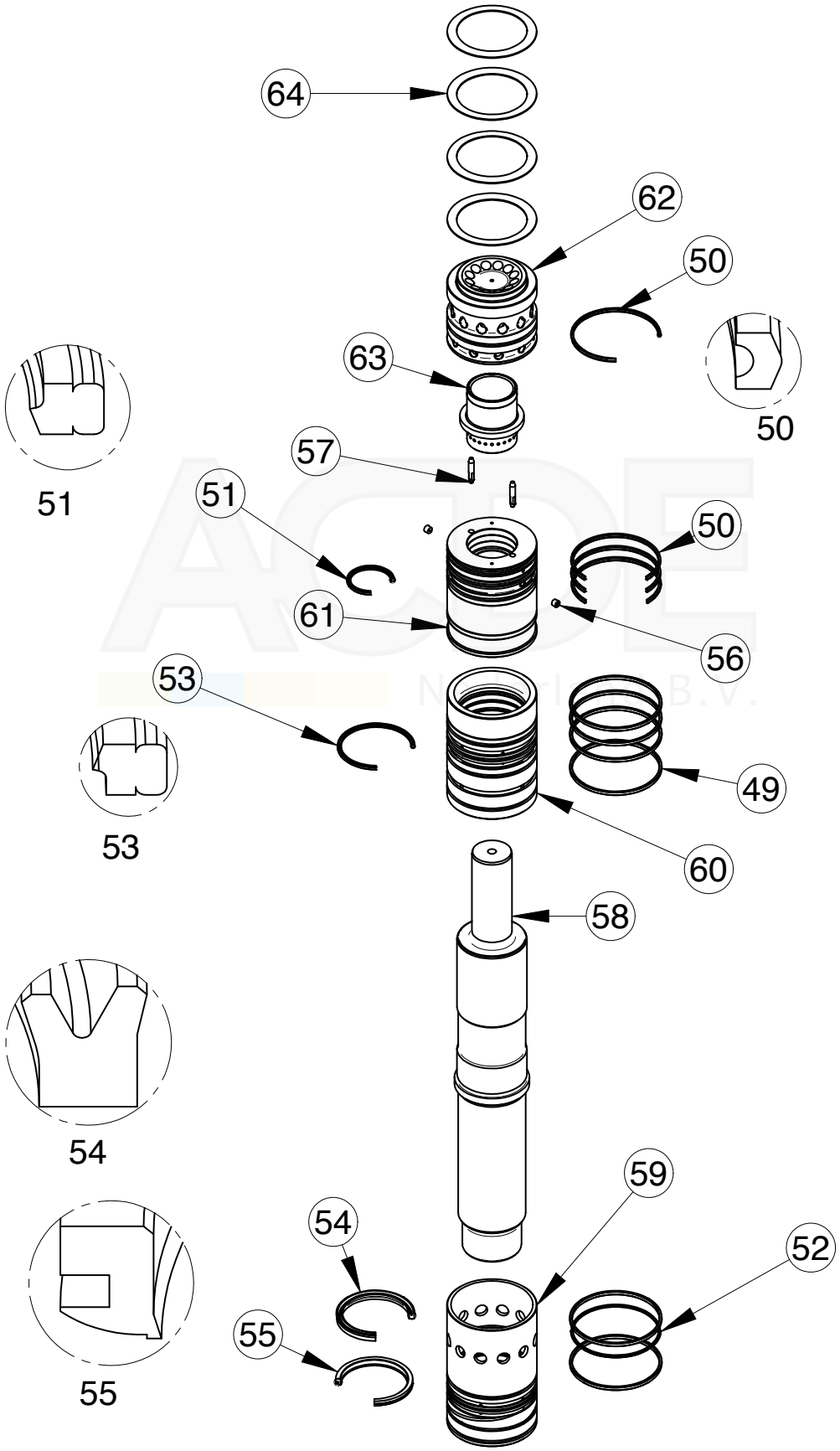
64
62
50
63
50
57
51
51
50
61
56
53
53
49
60
58
54
59
54
52
55
55

Spare parts

(Refer to the exploded views of the previous pages)

Ref	Quantity	Code	Description
49	6	A.00010186	O-RING
50	4	A.00010204	SEAL
51	1	A.00010629	SEAL
52	1	A.00010718	O-RING
53	1	A.00010719	SEAL
54	1	A.00010721	SEAL
55	1	A.00010722	SEAL
56	2	A.00030601	ALLEN PLUG
57	2	B.19520700	PILOTING GRINDED PISTON
58	1	B.26020200	PISTON
59	1	B.26020300	LOWER BODY BUSH
60	1	B.26020400	CENTRAL BODY BUSH
61	1	B.26020500	UPPER BODY BUSH
62	1	B.26030200	DISTRIBUTOR BUSH
63	1	B.26030300	DISTRIBUTOR VALVE
64	4	B.26030400	CUPPED SPRING WASHER

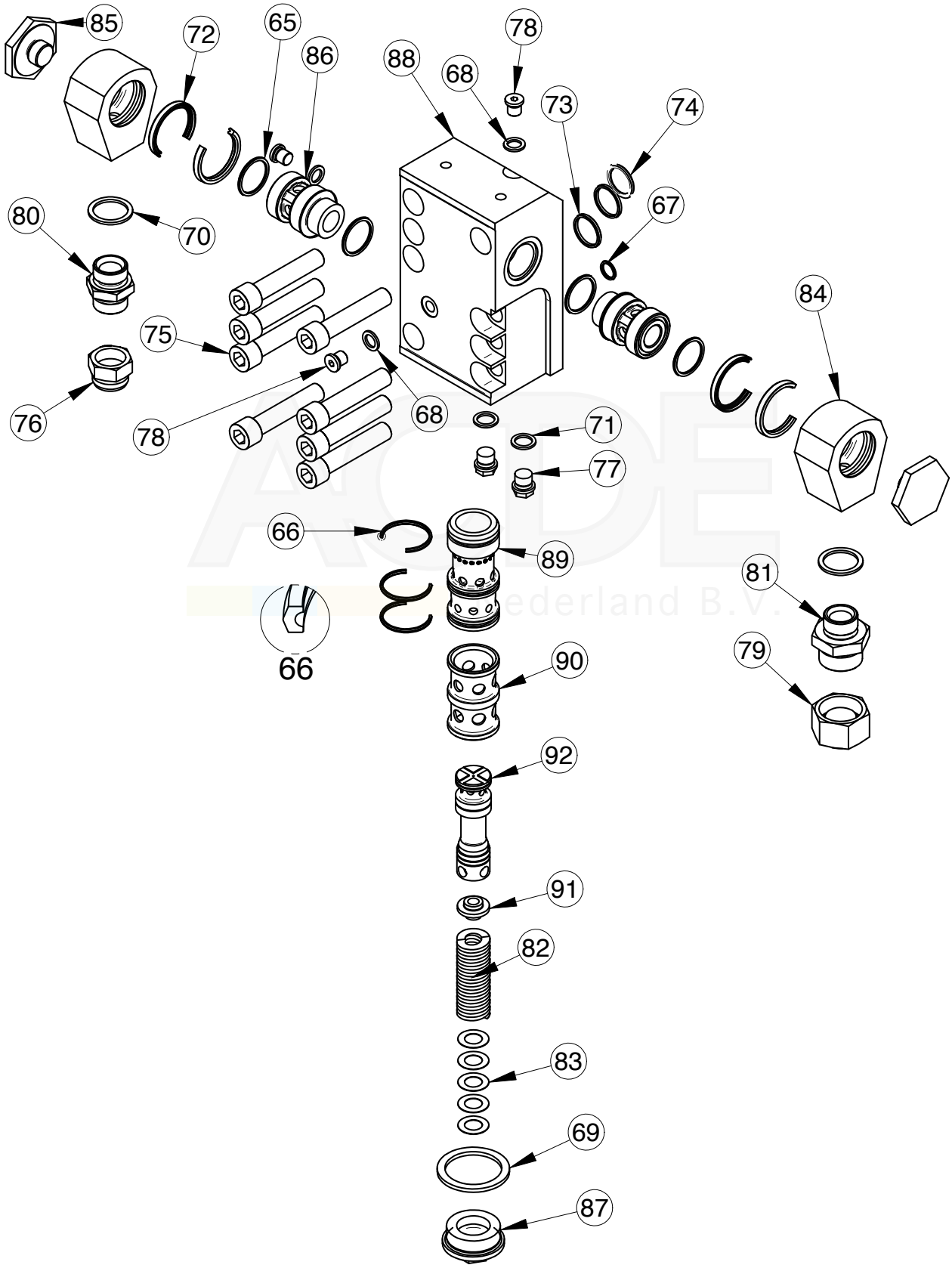
85
72
65
86
88
68
78
73
74
67
80
70
84
75
76
78
68
71
77
66
89
81
66
90
79
92
91
82
83
69
87

Spare parts

(Refer to the exploded views of the previous pages)

Ref	Quantity	Code	Description
65	4	A.00010055	O-RING
66	3	A.00010080	SEAL
67	1	A.00010273	O-RING
68	3	A.00010409	BONDED WASHER
69	1	A.00010413	BONDED WASHER
70	2	A.00010428	BONDED WASHER
71	2	A.00010431	BONDED WASHER
72	4	A.00010579	SEAL
73	2	A.00010693	O-RING
74	1	A.00012170	O-RING
75	8	A.00030173	SCREW
76	1	A.00331000	PLUG
77	2	A.00331038	PLUG
78	3	A.00331040	PLUG
79	1	A.00331140	PLUG
80	1	A.00332124	NIPPLE
81	1	A.00332129	REDUCTION
82	1	A.03330397	SPRING
83	5	A.03333455	WASHER
84	2	B.15530200	OGIVE
85	2	B.15530500	OGIVE PLUG
86	2	B.15530600	OGIVE SEAT
87	1	B.19010500	PLUG
88	1	B.19031100	OIL FLOW CONTROL BLOCK
89	1	B.19031200	BUSH
90	1	B.19031400	SPACER VALVE
91	1	B.19031500	SPRING GUIDE
92	1	B.26030500	SLIDING SPOOL

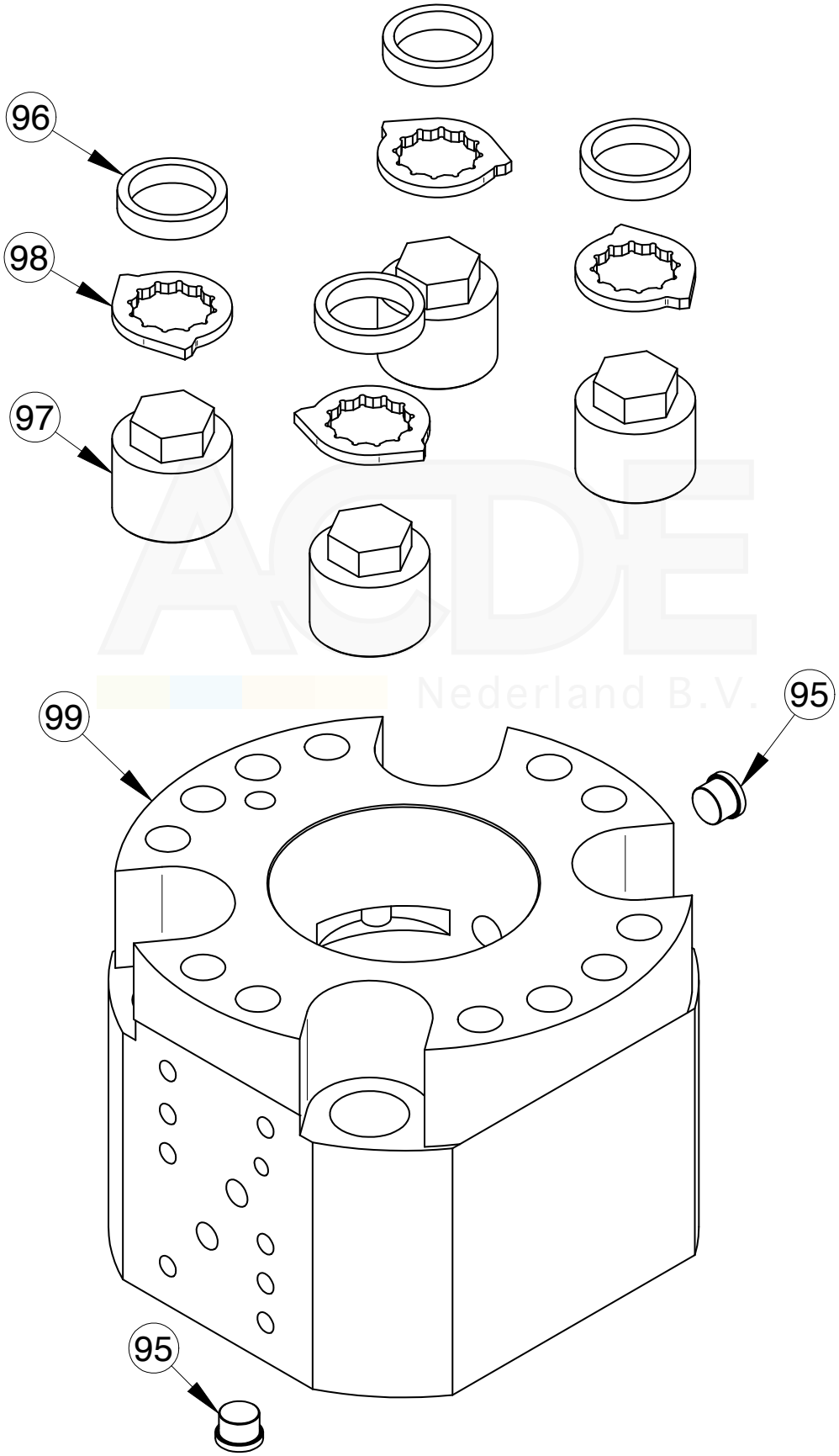

ACDE Nederland B.V.

Spare parts

(Refer to the exploded views of the previous pages)

Ref	Quantity	Code	Description
95	2	A.00331048	PLUG
96	4	B.07521200	RETAINER RING
97	4	B.23030500	UPPER TIE ROD NUT
98	4	B.23030700	NUT RETAINER
99	1	B.26030100	DISTRIBUTOR

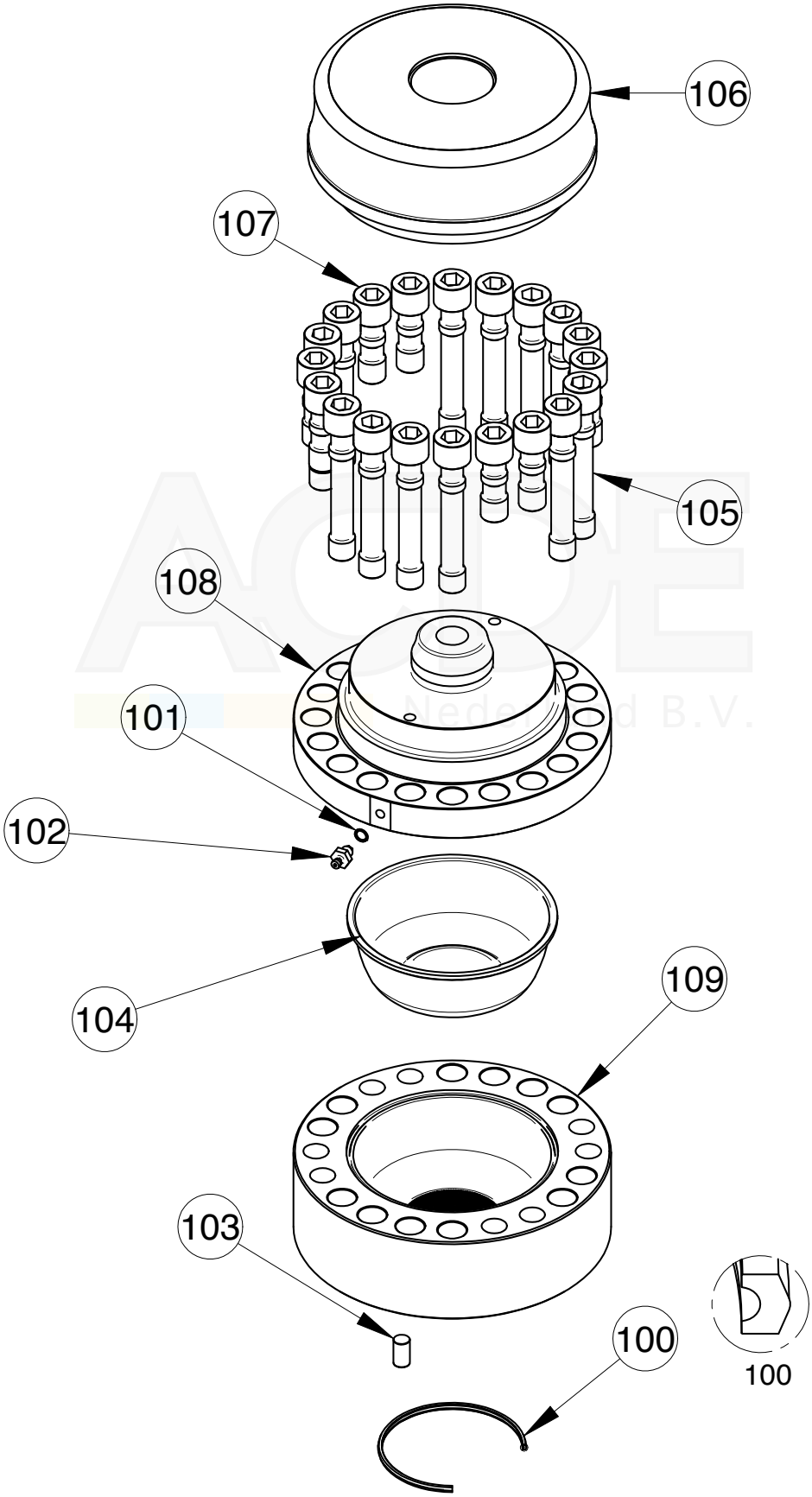
106
107
105
108
101
102
104
109
103
100
100

Spare parts

(Refer to the exploded views of the previous pages)

Ref	Quantity	Code	Description
100	1	A.00010204	SEAL
101	1	A.00010366	O-RING
102	1	A.00053464	NITROGEN CHARGING VALVE
103	1	A.03330240	CYLINDRICAL PIN
104	1	B.15040710	DIAPHRAGM
105	12	B.17040300	SCREW
106	1	B.17040600	UPPER BUFFER
107	8	B.20040500	SCREW
108	1	B.26040100	ACCUMULATOR COVER
109	1	B.26040200	ACCUMULATOR BASE

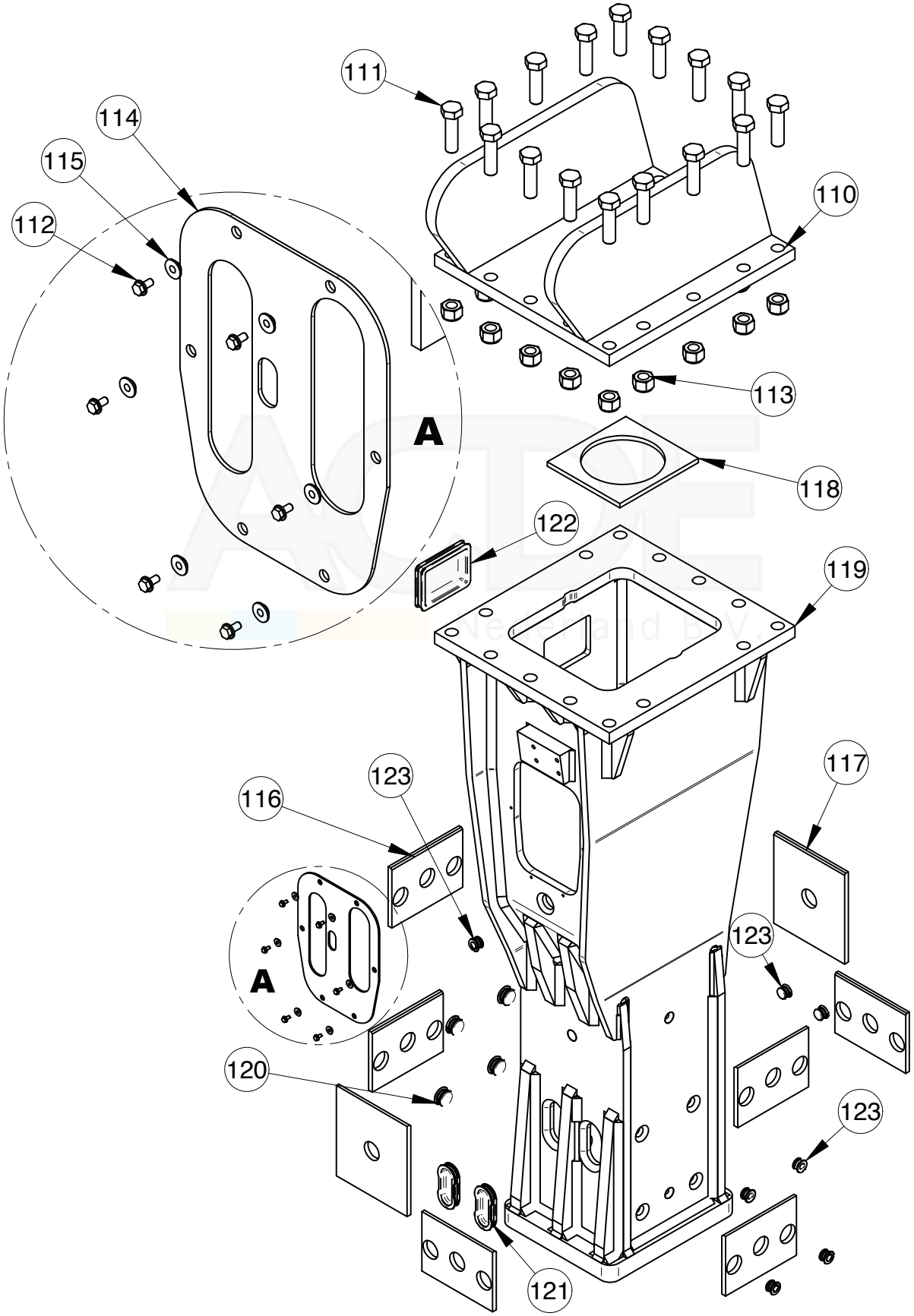
111
114
115
112
110
113
A
118
122
119
117
123
116
A
123
120
123
121

Spare parts

(Refer to the exploded views of the previous pages)

Ref	Quantity	Code	Description
110	1		ADAPTING PLATE
111	16	A.00030166	SCREW
112	6	A.00030708	SCREW
113	16	A.00330005	NUT
114	1	B.15552110	GUARD
115	6	B.15552200	GUARD SPACER
116	6	B.26051200	SHORT GUIDE
117	2	B.26051300	LONG GUIDE
118	1	B.26051400	LOWER PAD
119	1	B.26059100	CASE
120	4	B.30051210	PLUG
121	2	B.30051310	RETAINER HOLE PLUG
122	1	B.30052410	PLUG
123	7	B.30052810	PLUG

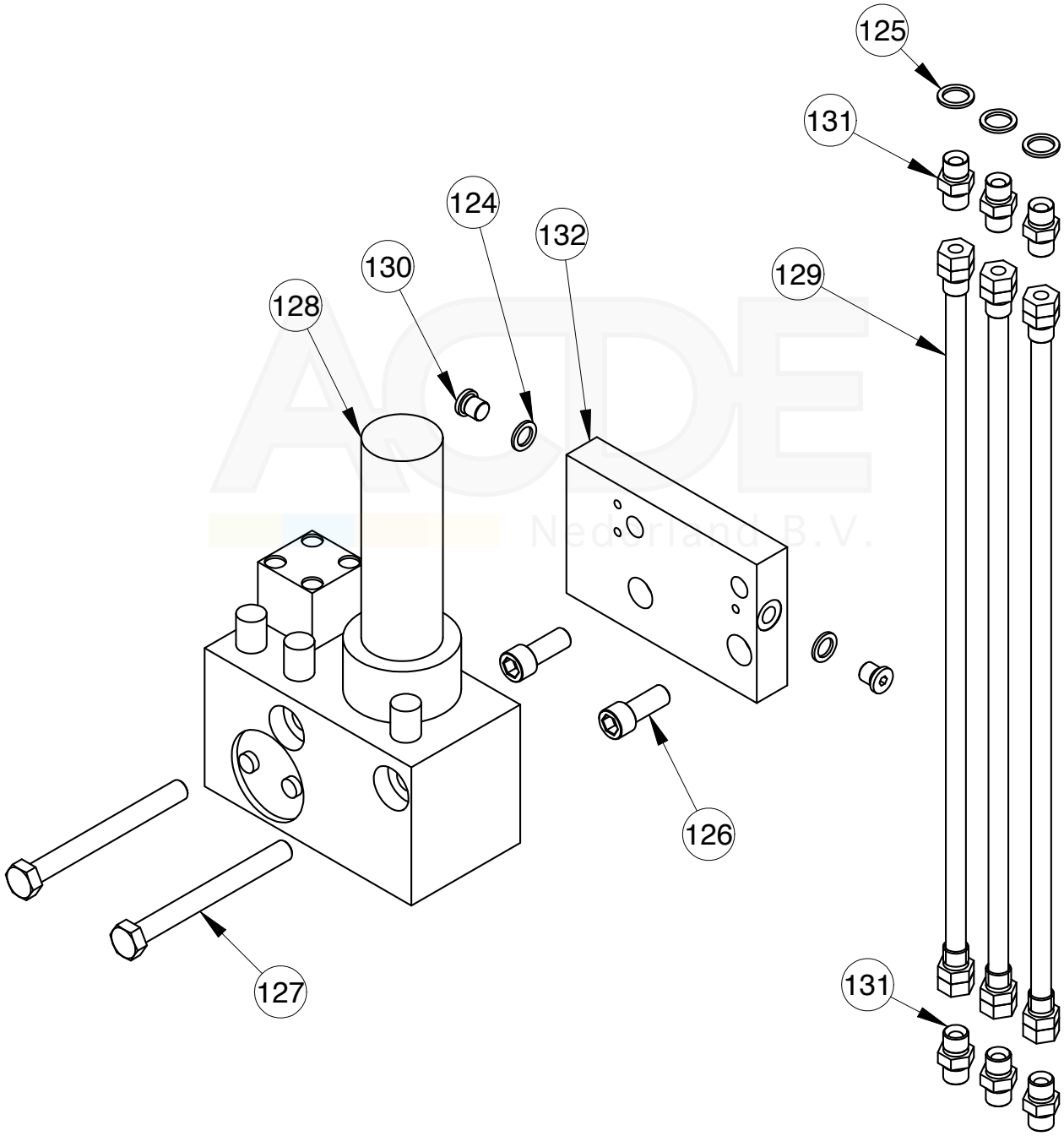
125
131
124
132
130
129
128
126
127
131

Spare parts

(Refer to the exploded views of the previous pages)

Ref	Quantity	Code	Description
124	2	A.00010409	BONDED WASHER
125	3	A.00010431	BONDED WASHER
126	2	A.00030593	SCREW
127	2	A.00031008	SCREW
128	1	A.00114722	GREASING PUMP
129	3	A.00114939	HOSE
130	2	A.00331040	PLUG
131	6	A.00332133	NIPPLE
132	1	B.32030400	GREASE PUMP HYDRAULIC BLOCK

17 - RICHIESTA PARTI DI RICAMBIO

Fotocopiare la presente, compilare e spedire per fax a SOCOMEC n. 0525-420375

FORM FOR THE REQUEST OF SPARE PARTS

Photocopy this form, fill out and send by fax to SOCOMEC no. +39 0525-420375

FORMULAIRE DEMANDE PIECES DE RECHANGE

Photocopier la présente fiche, remplir et envoyer par fax à SOCOMEC n. +39 0525-420375

FICHA PEDIDO REPUESTOS

Fotocopiar esta ficha, rellenarla y enviarla por fax a SOCOMEC n. +39 0525-420375

Cliente / Customer / Client / Cliente _____

Via / Street / Rue / Calle _____

Città / Town / Ville / Ciudad _____

C.A.P. / Postcode / Code postal / C.P. _____

Stato / State / Etat / Pais _____

P. IVA / V.A.T. / T.V.A. / IVA _____

N. Tel e fax _____

Martello / Hammer / Marteau / Martillo _____

Matricola / serial number / numéro de série / numero de matrìcula _____

Rif / ref. / rèf / referencia	***Cod. / code /code / codigo***	***q.tà / q.ty / q.tè / cantidad***	***descrizione/ description description/descripcìon***

Timbro e firma
Stamp and signature
Timbre et signature
Sello y firma

_____

ACDE Nederland B.V.